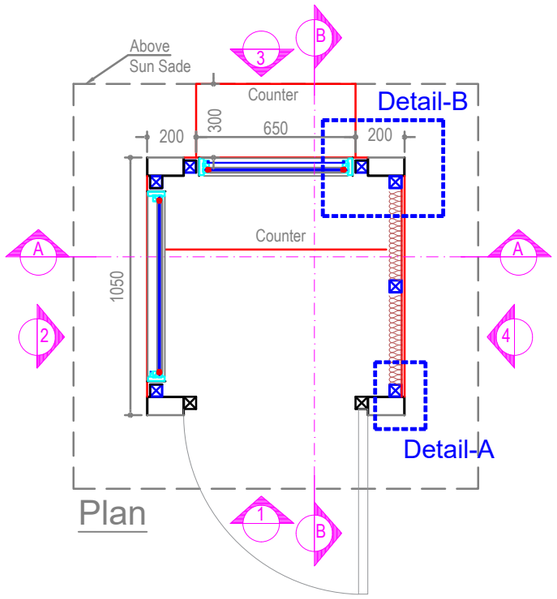

Plan

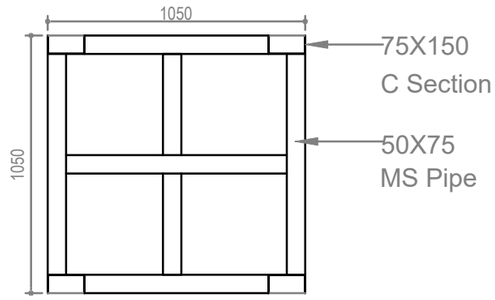

Base Plan

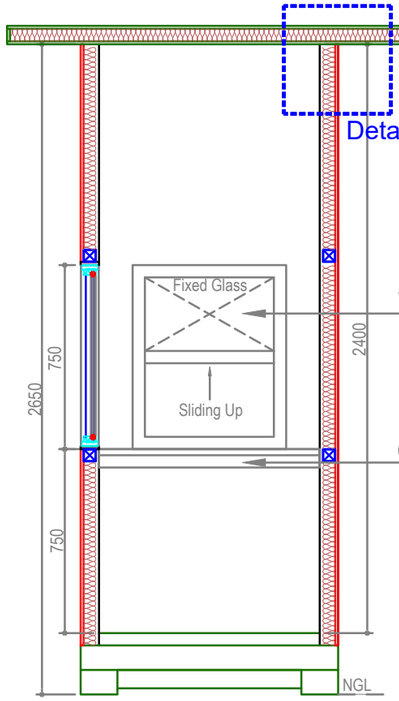

Section-A

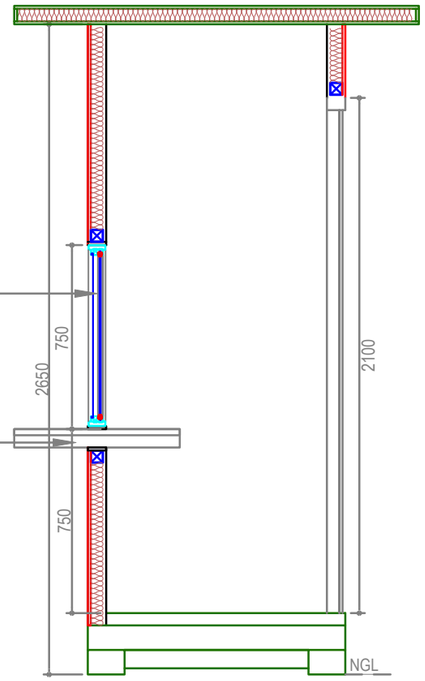

Section-B

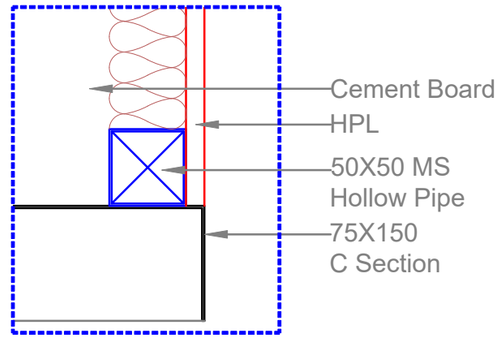

Detail-A

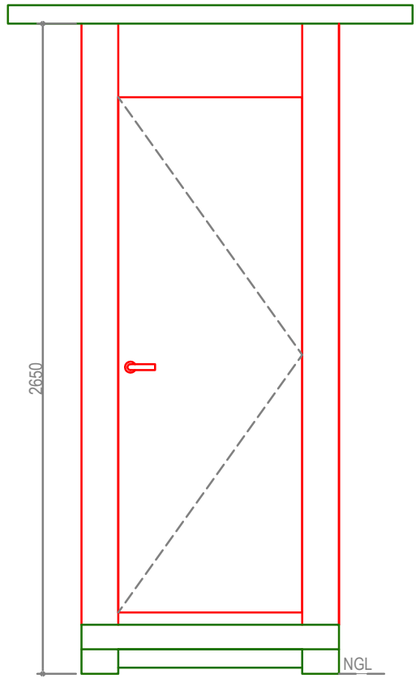

Elevation-1

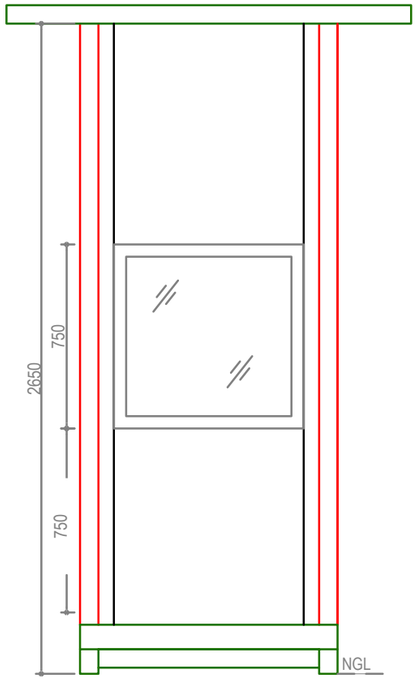

Elevation-2

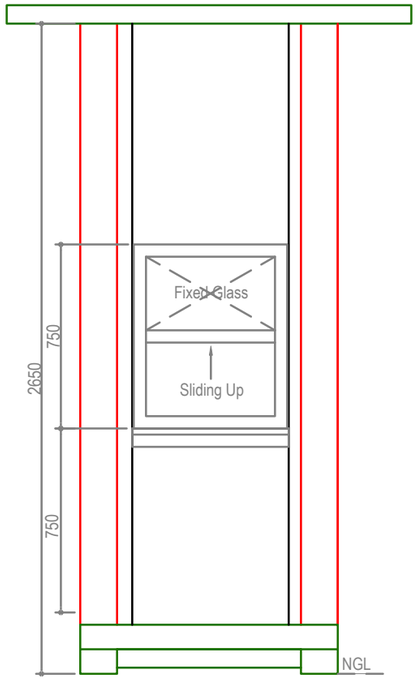

Elevation-3

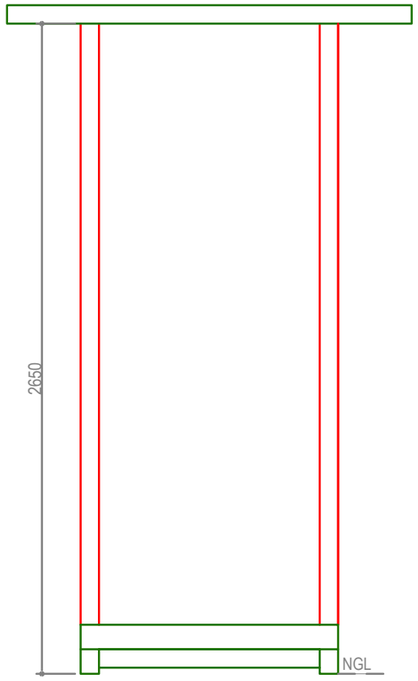

Elevation-4

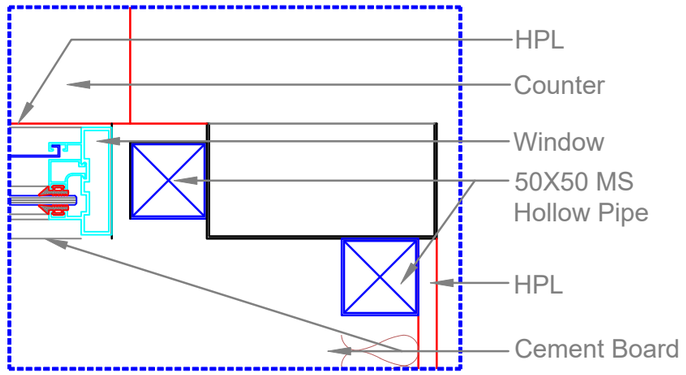

Detail-B

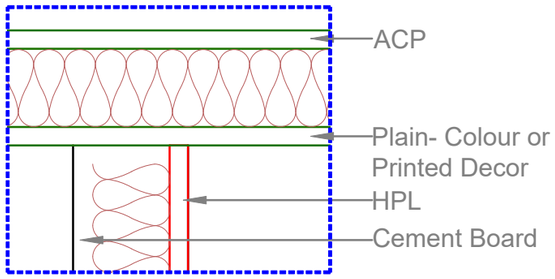

Detail-C

NOTE:

THIS DRAWING IS A COPYRIGHT. IT IS THE PROPERTY OF STUDIO VANRO AND IS NOT TO BE REPRODUCED, COPIED, HANDED OVER TO A THIRD PARTY OR USED FOR ANY PURPOSE OTHER THAN THAT FOR WHICH IT HAS BEEN LOANED.

GENERAL NOTES:

ALL DIMENSIONS INDICATED ARE IN MILLIMETER UNLESS MENTIONED OTHERWISE

ALL DIMENSIONS ARE TO BE CROSS CHECKED AT SITE AND ANY DISCREPANCY SHALL BE BROUGHT TO NOTICE BEFORE EXECUTION.

ALL SERVICE DRAWINGS SHALL BE READ IN CONJUNCTION WITH THIS DRAWING AND OTHER DETAILS, ANY DISCREPANCY WHATSOEVER SHALL BE BROUGHT TO NOTICE BEFORE EXECUTION.

REVISIONS

S.NO	DATE	DRAWN	CHECKED	VERIFIED	REMARKS

KEY PLAN

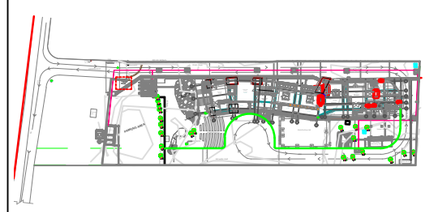

CLIENT: J D Centre of Art	PROJECT: J D Centre of Art, Bhubaneshwar	
ARCHITECT: Studio VanRO	DRAWING: PORTA CABIN	
STRUCTURAL CONSULTANT: Mahendra Raj Consultants Pvt. Ltd	SCALE: Nts	COMPUTER FILE:
MUSEUM DESIGN: Siddhartha Das Studio	DRAWN BY: MAHESH PRAKASH	CHECKED BY: VIVEK NAMDEV
SANITARY, ELECTRICAL, HVAC, FIRE FIGHTING CONSULTANT	DATE: 30-12-2024	DRAWING TITLE:

N