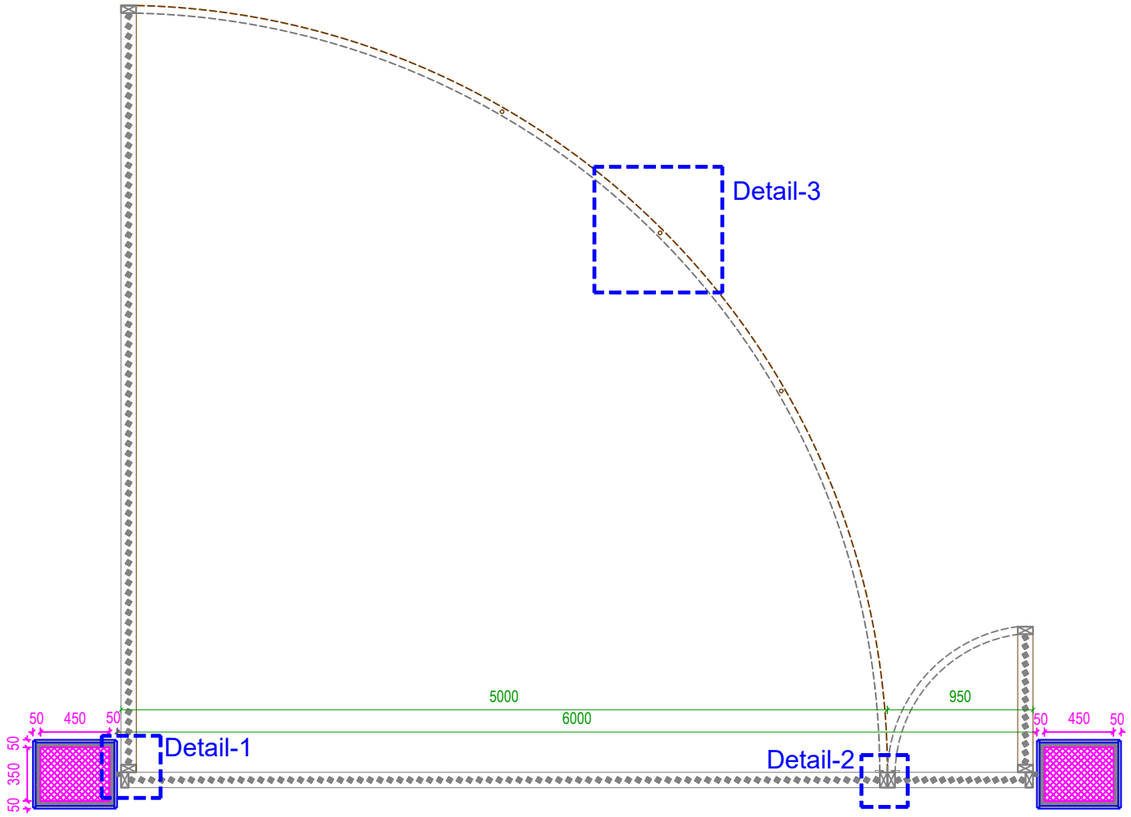

1 ARCHITECTURE LAYOUNT
SCALE 1:40

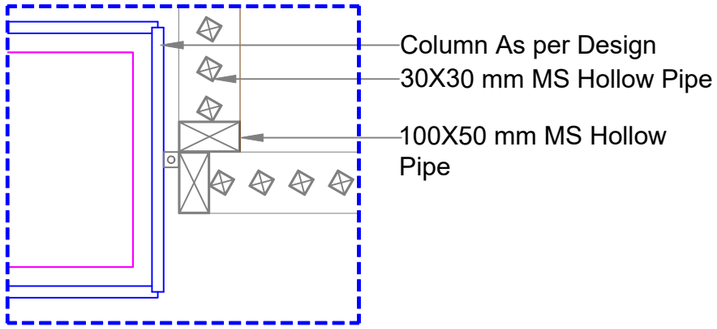

3 DETAIL-1
SCALE 1:10

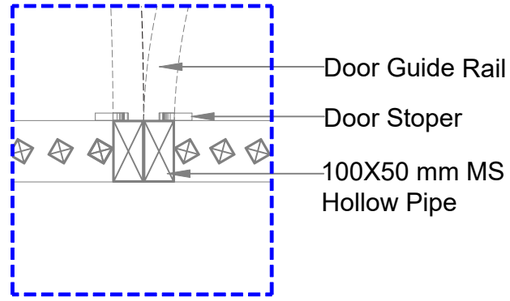

4 DETAIL-2
SCALE 1:10

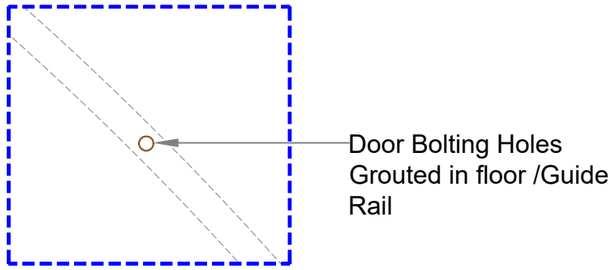

5 DETAIL-3
SCALE 1:10

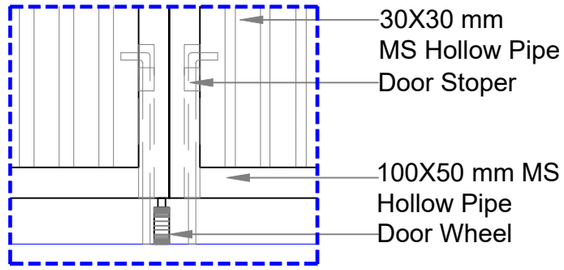

6 DETAIL-4
SCALE 1:10

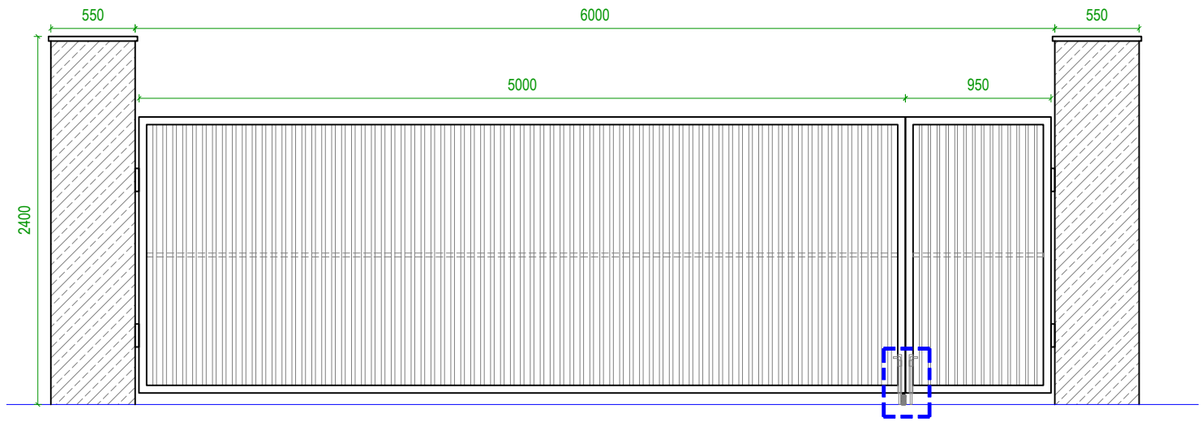

2 FRONT ELEVATION
SCALE 1:40

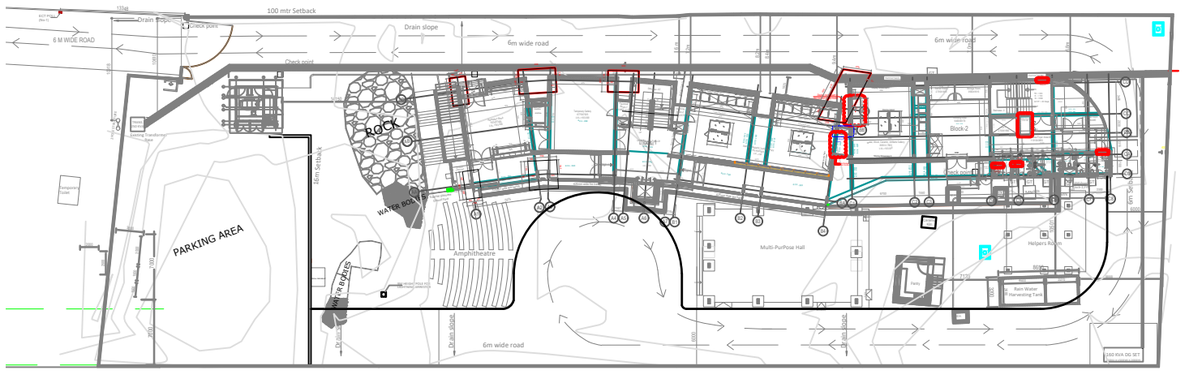

7 KEY PLAN
SCALE NTS

NOTE:

THIS DRAWING IS A COPYRIGHT. IT IS THE PROPERTY OF STUDIO VANRO AND IS NOT TO BE REPRODUCED, COPIED, HANDED OVER TO A THIRD PARTY OR USED FOR ANY PURPOSE OTHER THAN THAT FOR WHICH IT HAS BEEN LOANED.

GENERAL NOTES:

ALL DIMENSIONS INDICATED ARE IN MILLIMETER UNLESS MENTIONED OTHERWISE

ALL DIMENSIONS ARE TO BE CROSS CHECKED AT SITE AND ANY DISCREPANCY SHALL BE BROUGHT TO NOTICE BEFORE EXECUTION.

ALL SERVICE DRAWINGS SHALL BE READ IN CONJUNCTION WITH THIS DRAWING AND OTHER DETAILS,

ANY DISCREPANCIES IN DRAWING MUST BE REPORTED IMMEDIATELY TO PMC / ARCHITECT FOR FINAL DECISION BEFORE EXECUTION.

LEGEND

S.NO	D/W	NOS.	WIDTH	HEIGHT	LINTEL	SILL	REMARKS

REVISIONS

S.NO	DATE	DRAWN	CHECKED	VERIFIED	REMARKS

KEY PLAN

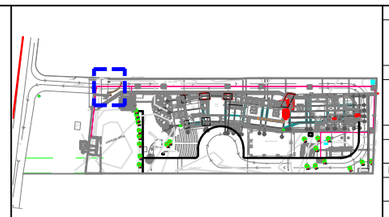

CLIENT: J D Centre of Art	PROJECT: J D Centre of Art, Bhubaneshwar
ARCHITECT: Vastu Shilpa Consultants/ Studio VanRO	DRAWING: MAIN GATE DETAIL
STRUCTURAL CONSULTANT: Mahendra Raj Consultants Pvt. Ltd	SCALE
MUSEUM DESIGN: Siddhartha Das Studio	DRAWN BY: MAHESH PRAKASH / CHECKED BY: VIVEK NAMDEV
SANITARY, ELECTRICAL, HVAC, FIRE FIGHTING CONSULTANT	DATE: 25-12-2024 / DRAWING TITLE

N

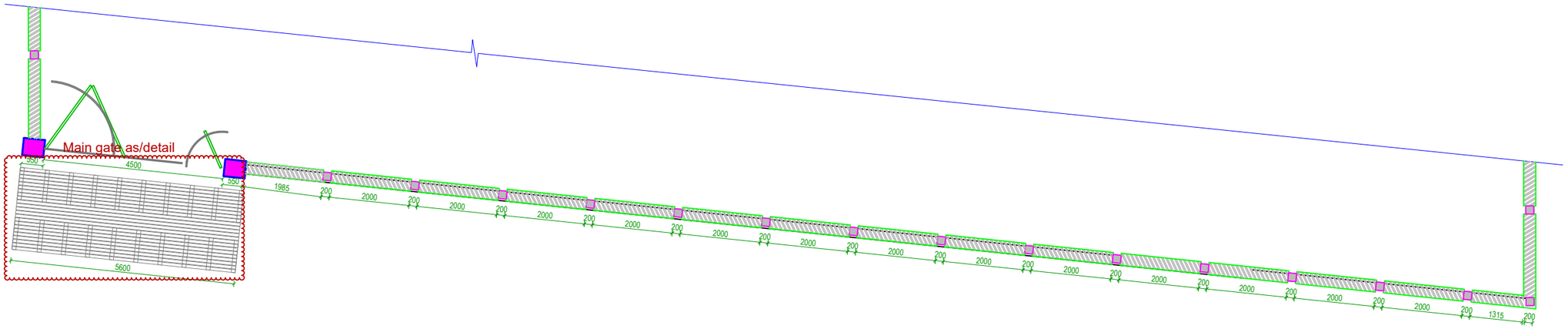

PART PLAN

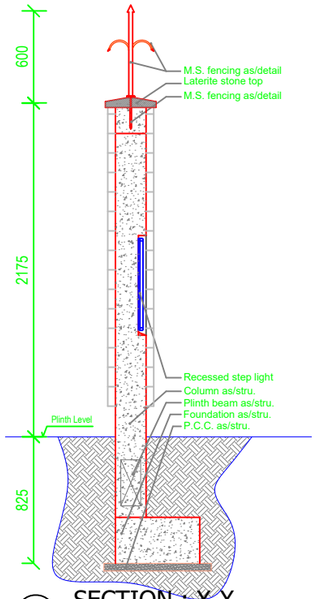

SECTION : X-X

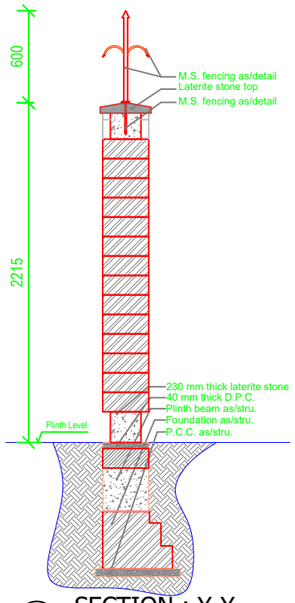

SECTION : Y-Y

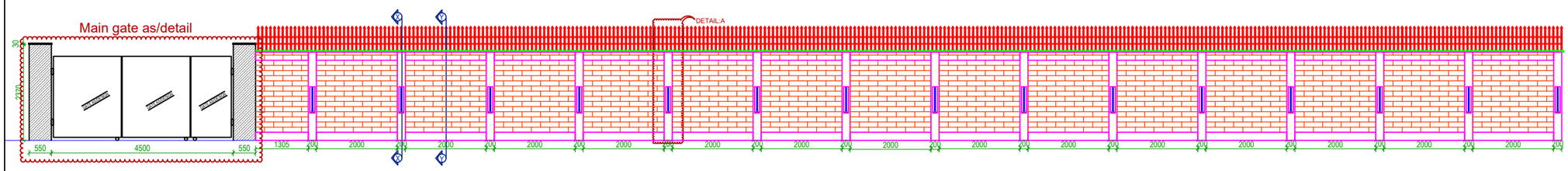

FRONT ELEVATION

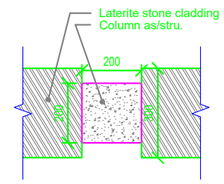

DETAIL-A

NOTE:

THIS DRAWING IS A COPYRIGHT. IT IS THE PROPERTY OF STUDIO VANRO AND IS NOT TO BE REPRODUCED, COPIED, HANDED OVER TO A THIRD PARTY OR USED FOR ANY PURPOSE OTHER THAN THAT FOR WHICH IT HAS BEEN LOANED.

GENERAL NOTES:

ALL DIMENSIONS INDICATED ARE IN MILLIMETER UNLESS MENTIONED OTHERWISE

ALL DIMENSIONS ARE TO BE CROSS CHECKED AT SITE AND ANY DISCREPANCY SHALL BE BROUGHT TO NOTICE BEFORE EXECUTION.

ALL SERVICE DRAWINGS SHALL BE READ IN CONJUNCTION WITH THIS DRAWING AND OTHER DETAILS.

ANY DISCREPANCIES IN DRAWING MUST BE REPORTED IMMEDIATELY TO PMC / ARCHITECT FOR FINAL DECISION BEFORE EXECUTION.

LEGEND

S.NO	D/W	NOS.	WIDTH	HEIGHT	LINTEL	SILL	REMARKS

REVISIONS

S.NO	DATE	DRAWN	CHECKED	VERIFIED	REMARKS

KEY PLAN

CLIENT: J D Centre of Art	PROJECT: J D Centre of Art, Bhubaneshwar
ARCHITECT: Vastu Shilpa Consultants/ Studio VanRO	DRAWING: FRONT BOUNDARY WALL CIVIL DETAIL LAYOUT
STRUCTURAL CONSULTANT: Mahendra Raj Consultants Pvt. Ltd	SCALE: NTS
MUSEUM DESIGN: Siddhartha Das Studio	DRAWN BY: MAHESH PRAKASH; CHECKED BY: SIDDHARTHA DAS
SANITARY, ELECTRICAL, HVAC, FIRE FIGHTING CONSULTANT	DATE: 07-06-2024; DRAWING TITLE:

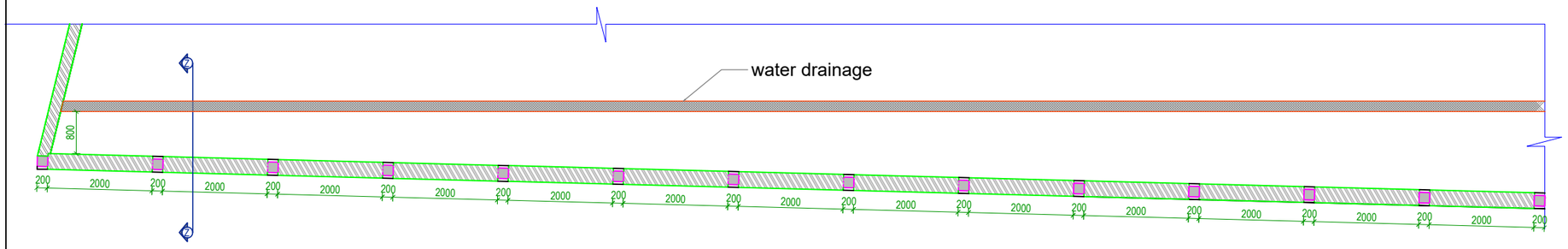

PART PLAN

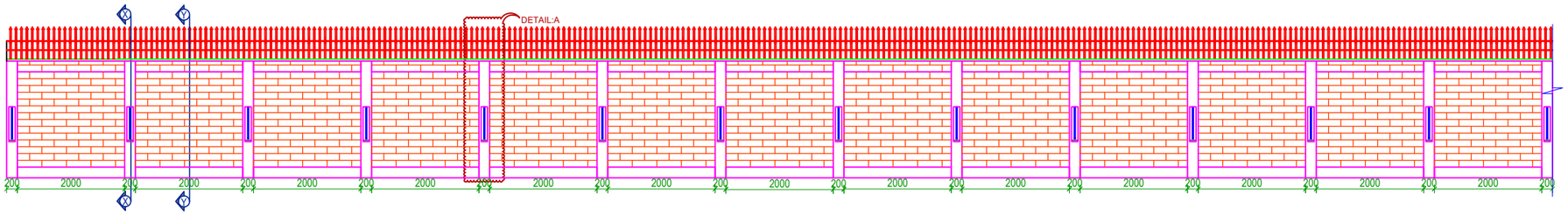

FRONT ELEVATION

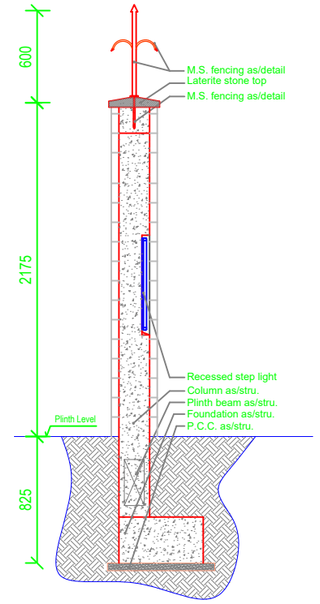

SECTION : X-X

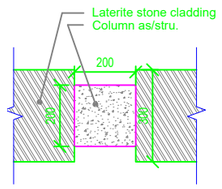

DETAIL-A

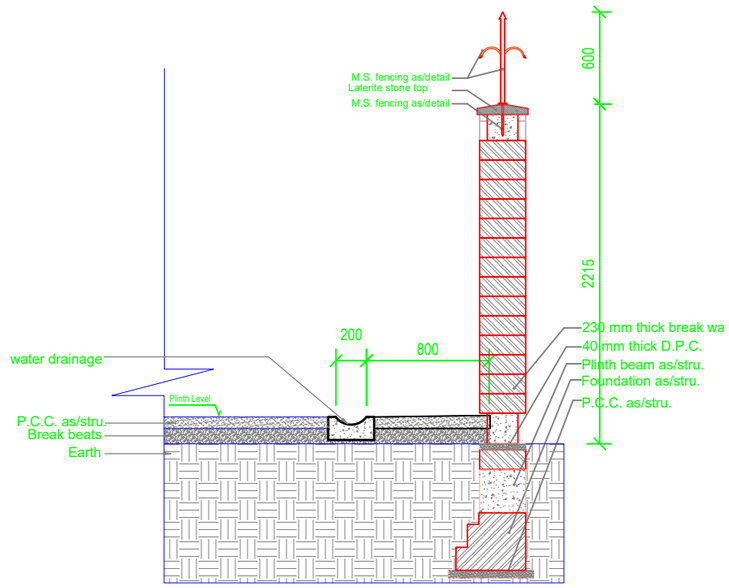

SECTION : Z-Z

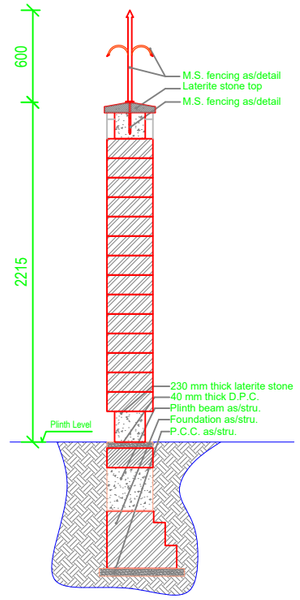

SECTION : Y-Y

NOTE:

THIS DRAWING IS A COPYRIGHT. IT IS THE PROPERTY OF STUDIO VANRO AND IS NOT TO BE REPRODUCED, COPIED, HANDED OVER TO A THIRD PARTY OR USED FOR ANY PURPOSE OTHER THAN THAT FOR WHICH IT HAS BEEN LOANED.

GENERAL NOTES:

ALL DIMENSIONS INDICATED ARE IN MILLIMETER UNLESS MENTIONED OTHERWISE

ALL DIMENSIONS ARE TO BE CROSS CHECKED AT SITE AND ANY DISCREPANCY SHALL BE BROUGHT TO NOTICE BEFORE EXECUTION.

ALL SERVICE DRAWINGS SHALL BE READ IN CONJUNCTION WITH THIS DRAWING AND OTHER DETAILS.

ANY DISCREPANCIES IN DRAWING MUST BE REPORTED IMMEDIATELY TO PMC / ARCHITECT FOR FINAL DECISION BEFORE EXECUTION.

LEGEND

S.NO	D/W	NOS.	WIDTH	HEIGHT	LINTEL	SILL	REMARKS

REVISIONS

S.NO	DATE	DRAWN	CHECKED	VERIFIED	REMARKS

KEY PLAN

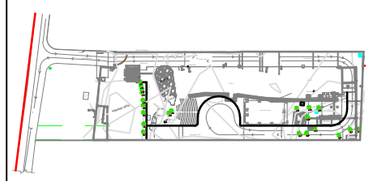

CLIENT: J D Centre of Art	PROJECT: J D Centre of Art, Bhubaneshwar
ARCHITECT: Vastu Shilpa Consultants/ Studio VanRO	DRAWING: SIDE BOUNDARY WALL CIVIL DETAIL LAYOUT
STRUCTURAL CONSULTANT: Mahendra Raj Consultants Pvt. Ltd	SCALE: NTS
MUSEUM DESIGN: Siddhartha Das Studio	DRAWN BY: MAHESH PRAKASH / CHECKED BY: SIDDHARTHA DAS
SANITARY, ELECTRICAL, HVAC, FIRE FIGHTING CONSULTANT	DATE: 04-12-2024 / DRAWING TITLE

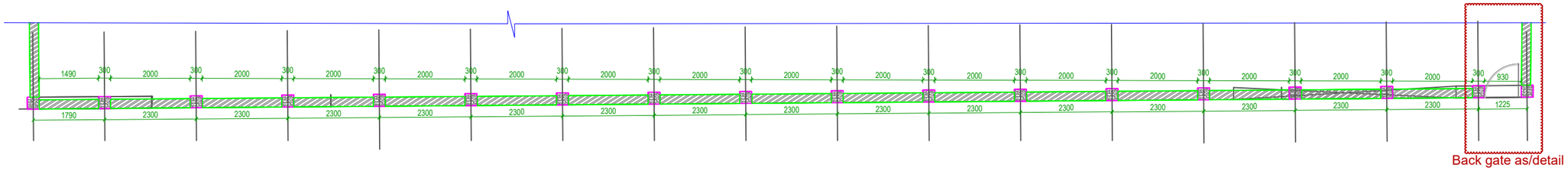

PART PLAN

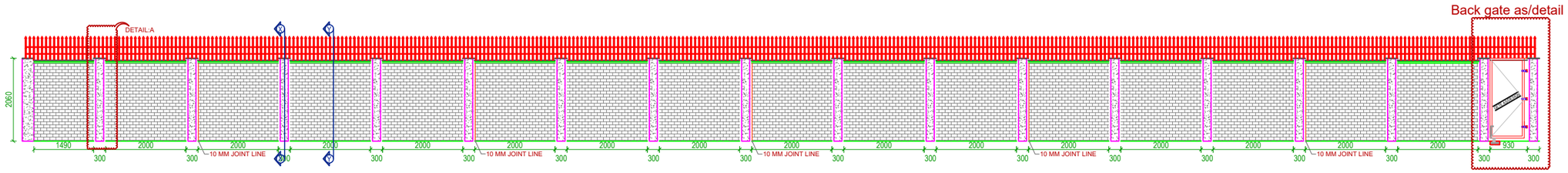

FRONT ELEVATION

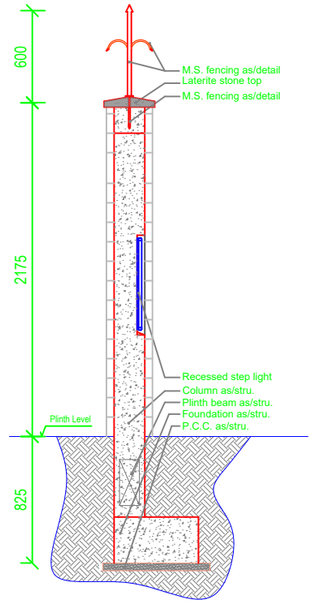

SECTION : X-X

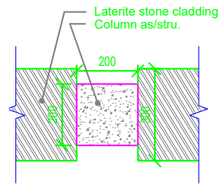

DETAIL-A

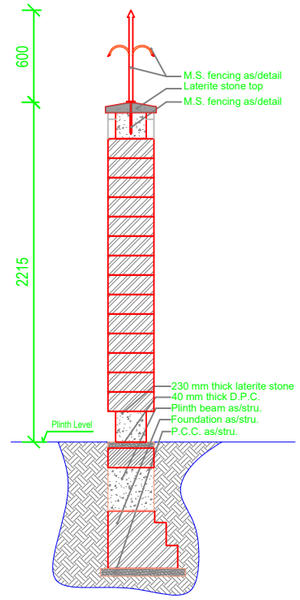

SECTION : Y-Y

NOTE:

THIS DRAWING IS A COPYRIGHT. IT IS THE PROPERTY OF STUDIO VANRO AND IS NOT TO BE REPRODUCED, COPIED, HANDED OVER TO A THIRD PARTY OR USED FOR ANY PURPOSE OTHER THAN THAT FOR WHICH IT HAS BEEN LOANED.

GENERAL NOTES:

ALL DIMENSIONS INDICATED ARE IN MILLIMETER UNLESS MENTIONED OTHERWISE

ALL DIMENSIONS ARE TO BE CROSS CHECKED AT SITE AND ANY DISCREPANCY SHALL BE BROUGHT TO NOTICE BEFORE EXECUTION.

ALL SERVICE DRAWINGS SHALL BE READ IN CONJUNCTION WITH THIS DRAWING AND OTHER DETAILS.

ANY DISCREPANCIES IN DRAWING MUST BE REPORTED IMMEDIATELY TO PMC / ARCHITECT FOR FINAL DECISION BEFORE EXECUTION.

LEGEND

S.NO	D/W	NOS.	WIDTH	HEIGHT	LINTEL	SILL	REMARKS

REVISIONS

S.NO	DATE	DRAWN	CHECKED	VERIFIED	REMARKS

KEY PLAN

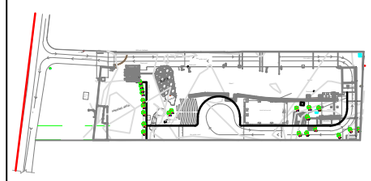

CLIENT: J D Centre of Art	PROJECT: J D Centre of Art, Bhubaneshwar
ARCHITECT: Vastu Shilpa Consultants/ Studio VanRO	DRAWING: BACK BOUNDARY WALL CIVIL DETAIL LAYOUT
STRUCTURAL CONSULTANT: Mahendra Raj Consultants Pvt. Ltd	SCALE: NTS
MUSEUM DESIGN: Siddhartha Das Studio	DRAWN BY: MAHESH PRAKASH / CHECKED BY: SIDDHARTHA DAS
SANITARY, ELECTRICAL, HVAC, FIRE FIGHTING CONSULTANT	DATE: 04-12-2024 / DRAWING TITLE: A-G-JDCA-PH(1B)-901f R0

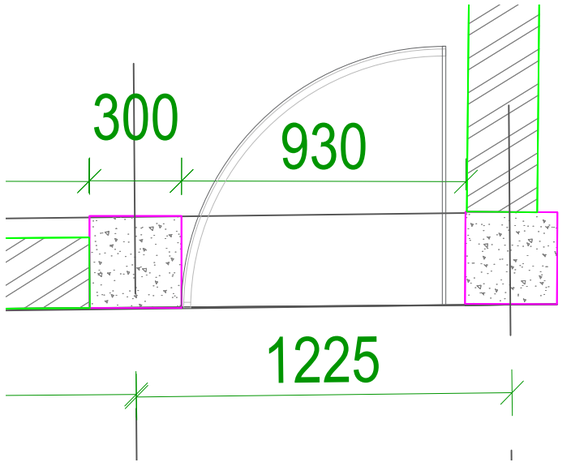

DOOR PLAN

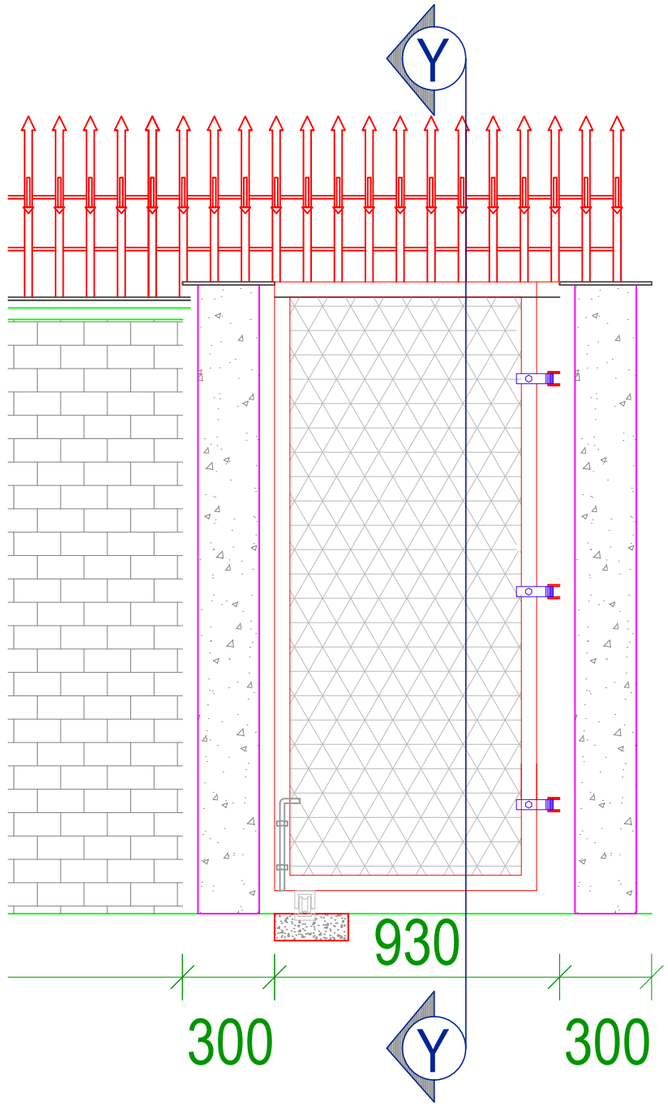

FRONT ELEVATION

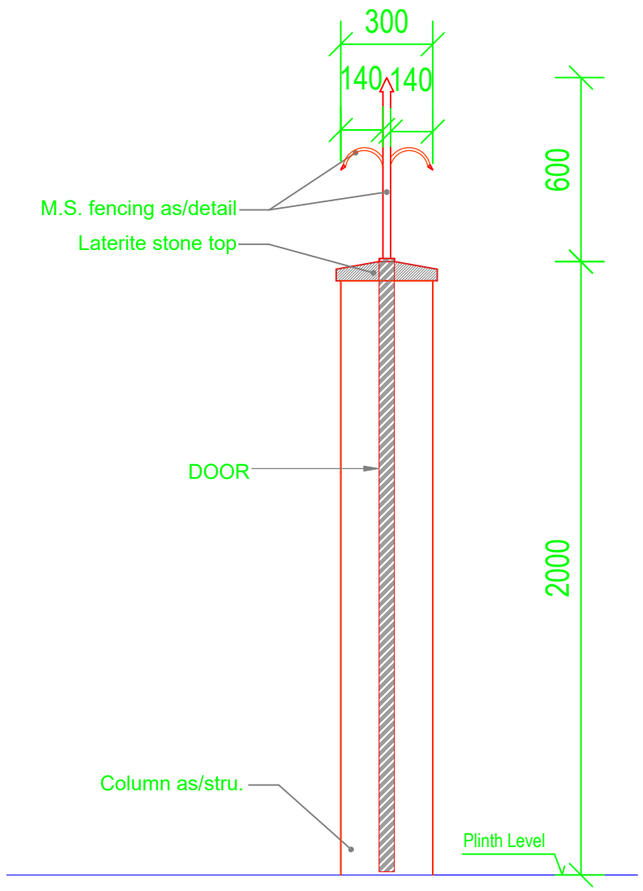

SECTION : A-A

NOTE:

THIS DRAWING IS A COPYRIGHT. IT IS THE PROPERTY OF STUDIO VANRO AND IS NOT TO BE REPRODUCED, COPIED, HANDED OVER TO A THIRD PARTY OR USED FOR ANY PURPOSE OTHER THAN THAT FOR WHICH IT HAS BEEN LOANED.

GENERAL NOTES:

ALL DIMENSIONS INDICATED ARE IN MILLIMETER UNLESS MENTIONED OTHERWISE

ALL DIMENSIONS ARE TO BE CROSS CHECKED AT SITE AND ANY DISCREPANCY SHALL BE BROUGHT TO NOTICE BEFORE EXECUTION.

ALL SERVICE DRAWINGS SHALL BE READ IN CONJUNCTION WITH THIS DRAWING AND OTHER DETAILS.

ANY DISCREPANCIES IN DRAWING MUST BE REPORTED IMMEDIATELY TO PMC / ARCHITECT FOR FINAL DECISION BEFORE EXECUTION.

LEGEND

S.NO	D/W	NOS.	WIDTH	HEIGHT	LINTEL	SILL	REMARKS

REVISIONS

S.NO	DATE	DRAWN	CHECKED	VERIFIED	REMARKS

KEY PLAN

CLIENT: J D Centre of Art	PROJECT: J D Centre of Art, Bhubaneshwar
ARCHITECT: Vastu Shilpa Consultants/ Studio VanRO	DRAWING: BACK DOOR DETAIL
STRUCTURAL CONSULTANT: Mahendra Raj Consultants Pvt. Ltd	SCALE: NTS
MUSEUM DESIGN: Siddhartha Das Studio	DRAWN BY: MAHESH PRAKASH; CHECKED BY: SIDDHARTHA DAS
SANITARY, ELECTRICAL, HVAC, FIRE FIGHTING CONSULTANT	DATE: 04-05-2022; DRAWING TITLE: A-G-JDCA-PH(1B)-901f R0

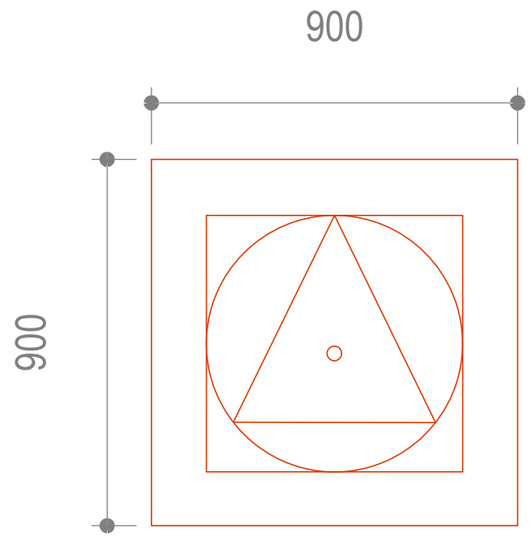

MS Signage

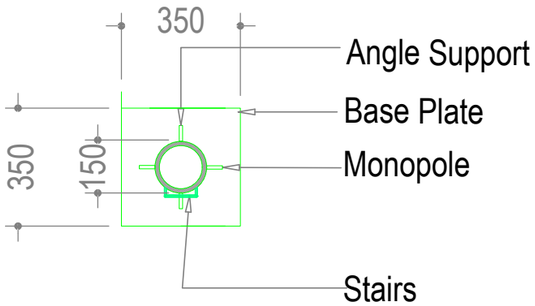

Plan

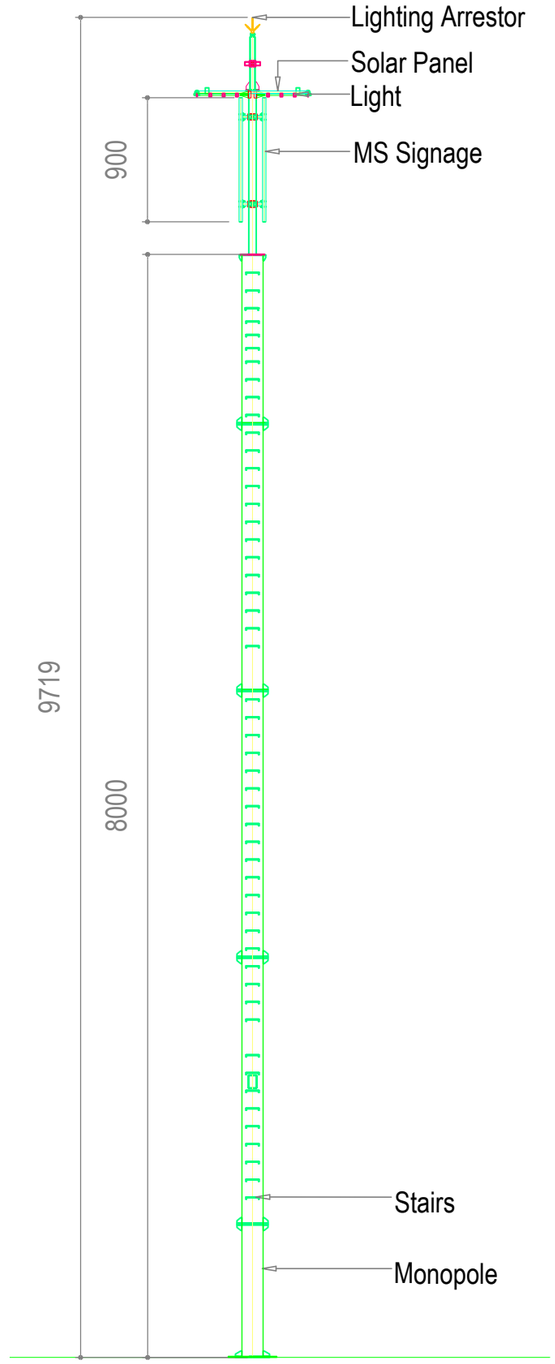

Elevation

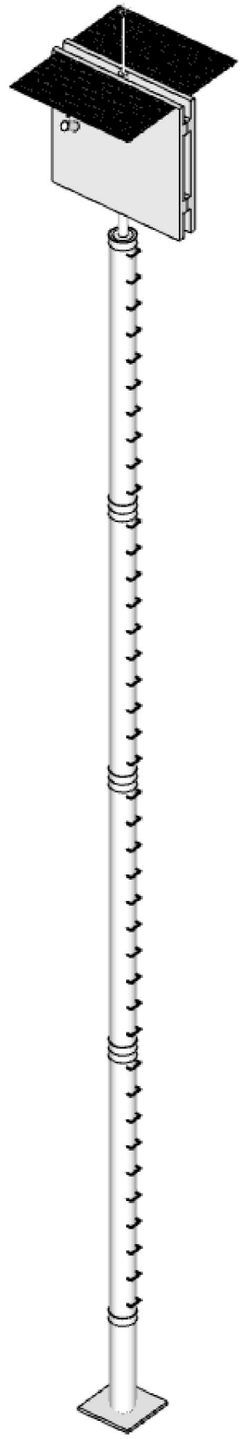

Isometric View

NOTE:

THIS DRAWING IS A COPYRIGHT. IT IS THE PROPERTY OF STUDIO VANRO AND IS NOT TO BE REPRODUCED, COPIED, HANDED OVER TO A THIRD PARTY OR USED FOR ANY PURPOSE OTHER THAN THAT FOR WHICH IT HAS BEEN LOANED.

GENERAL NOTES:

ALL DIMENSIONS INDICATED ARE IN MILLIMETER UNLESS MENTIONED OTHERWISE

ALL DIMENSIONS ARE TO BE CROSS CHECKED AT SITE AND ANY DISCREPANCY SHALL BE BROUGHT TO NOTICE BEFORE EXECUTION.

ALL SERVICE DRAWINGS SHALL BE READ IN CONJUNCTION WITH THIS DRAWING AND OTHER DETAILS.

ANY DISCREPANCIES IN DRAWING MUST BE REPORTED IMMEDIATELY TO PMC / ARCHITECT FOR FINAL DECISION BEFORE EXECUTION.

LEGEND

S.NO	D/W	NOS.	WIDTH	HEIGHT	LINTEL	SILL	REMARKS

REVISIONS

S.NO	DATE	DRAWN	CHECKED	VERIFIED	REMARKS

KEY PLAN

CLIENT: J D Centre of Art	PROJECT: J D Centre of Art, Bhubaneshwar
ARCHITECT: Vastu Shilpa Consultants/ Studio VanRO	DRAWING: JDCA - Signage
STRUCTURAL CONSULTANT: Mahendra Raj Consultants Pvt. Ltd	SCALE: NTS
MUSEUM DESIGN: Siddhartha Das Studio	DRAWN BY / CHECKED BY
SANITARY, ELECTRICAL, HVAC, FIRE FIGHTING CONSULTANT	DATE: 03-03-2023 / DRAWING TITLE